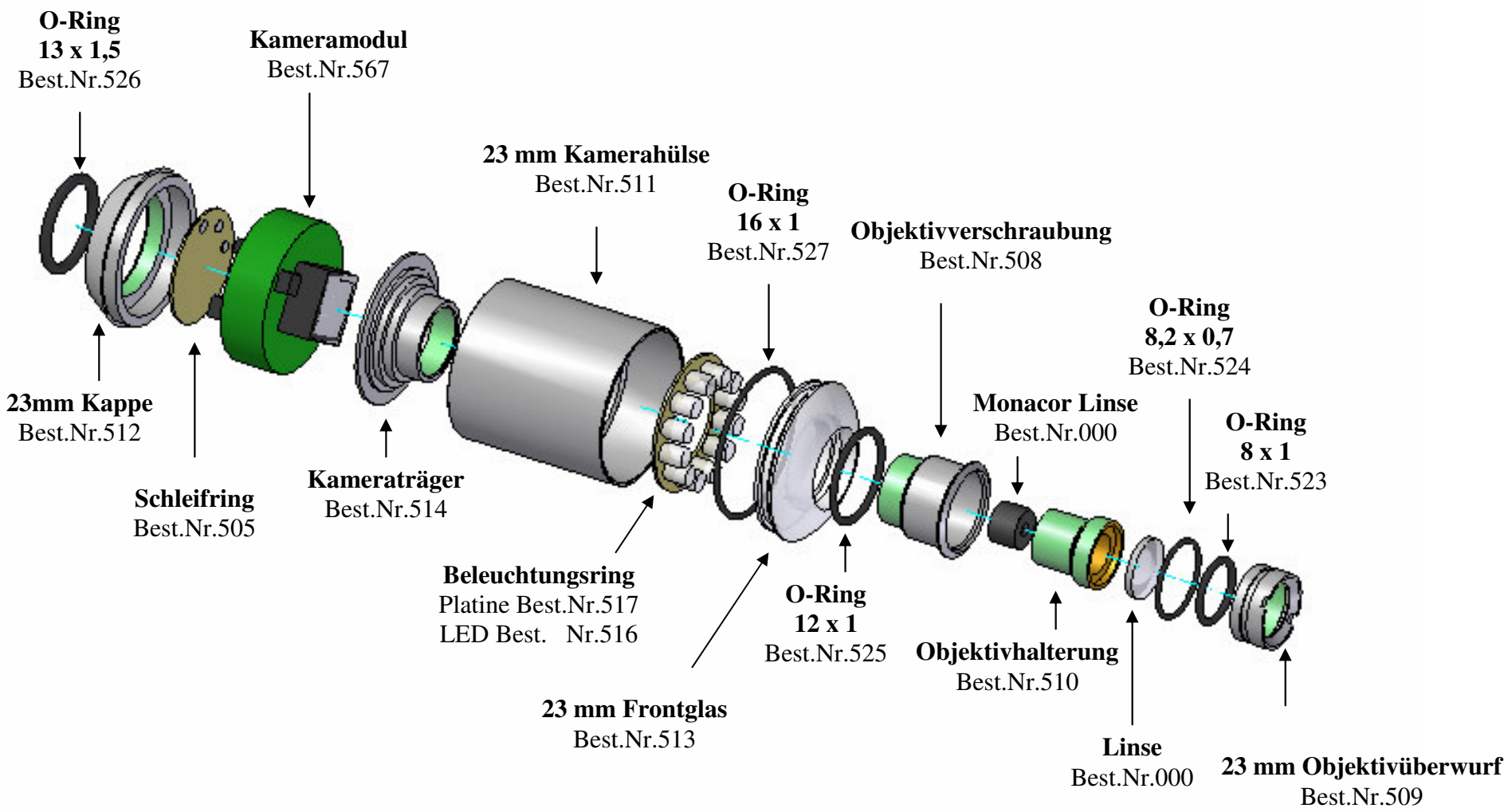23 mm Kamerakopf